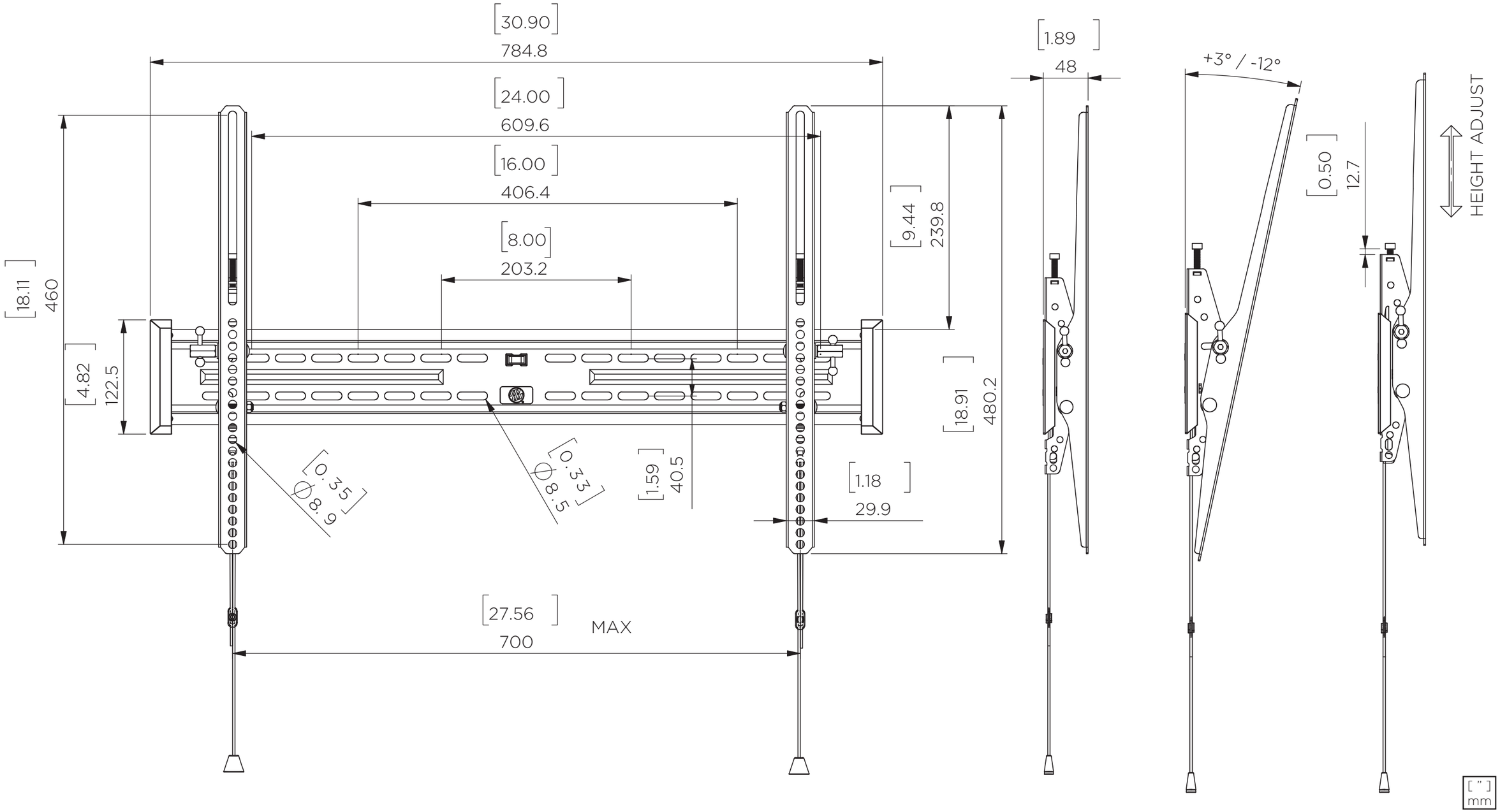

MW175T74P

LARGE TILT TV MOUNT

NOTES: UNLESS OTHERWISE SPECIFIED

1. SCREEN SIZE COMPATIBILITY: MOST 37" - 90" SCREENS
2. VESA STANDARD COMPATIBILITY (WIDTH X HEIGHT): 100 X 100 TO 700 X 400 MM
3. MAXIMUM VESA MOUNTING CONFIGURATION: 700 X 400 MM
4. MAXIMUM WEIGHT CAPACITY: 175 LBS (79.4 KG)
5. VIEWING ANGLE: -12° to + 3°
6. PRODUCT COLOR: BLACK

MOUNTS

PROPRIETARY AND CONFIDENTIAL

The information contained in this drawing is the sole property of MW PRODUCTS L.L.C.

Any reproduction in part or as a whole without the written permission of MW PRODUCTS L.L.C. is prohibited.